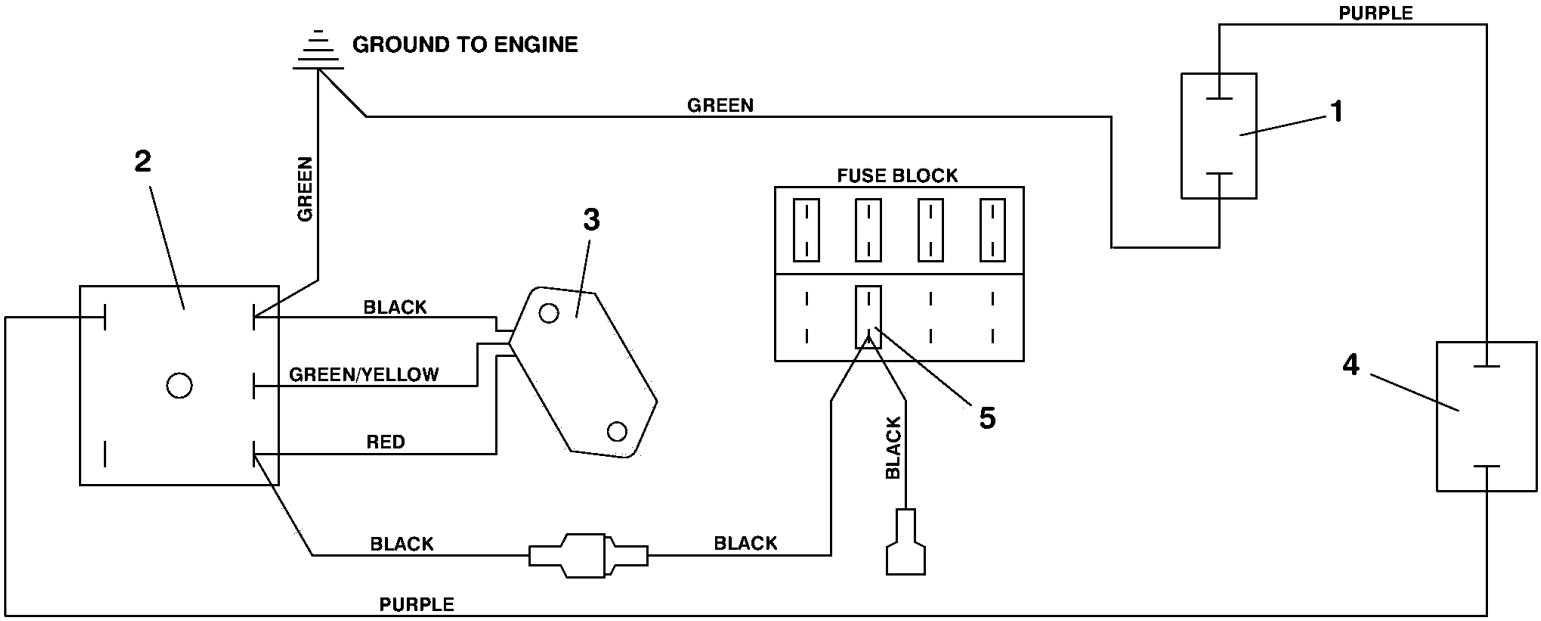
GROUND TO ENGINE
PURPLE
GREEN
1
2
GREEN
FUSE BLOCK
3
BLACK
GREEN/YELLOW
RED
5
4
BLACK
BLACK
BLACK
PURPLE

99073

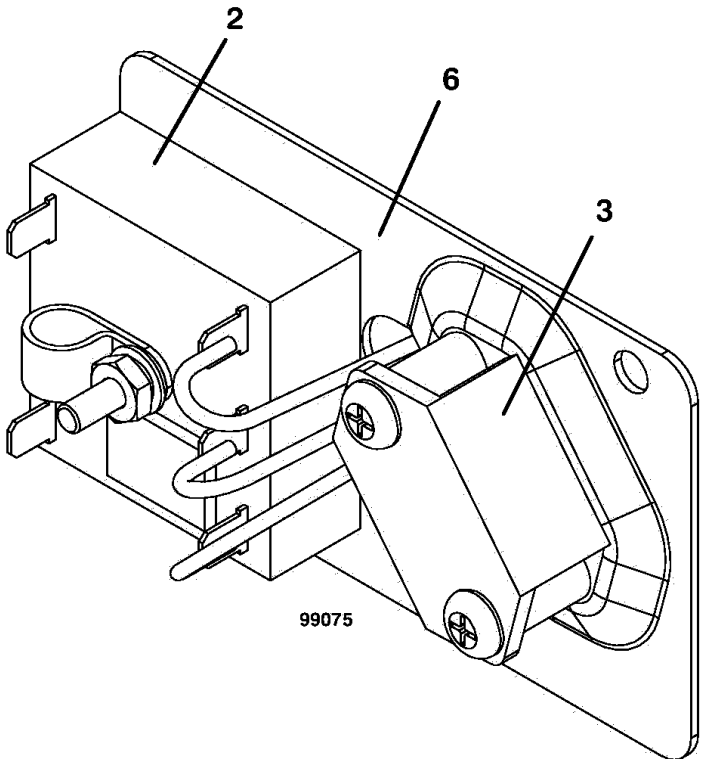
2
6
3

99075