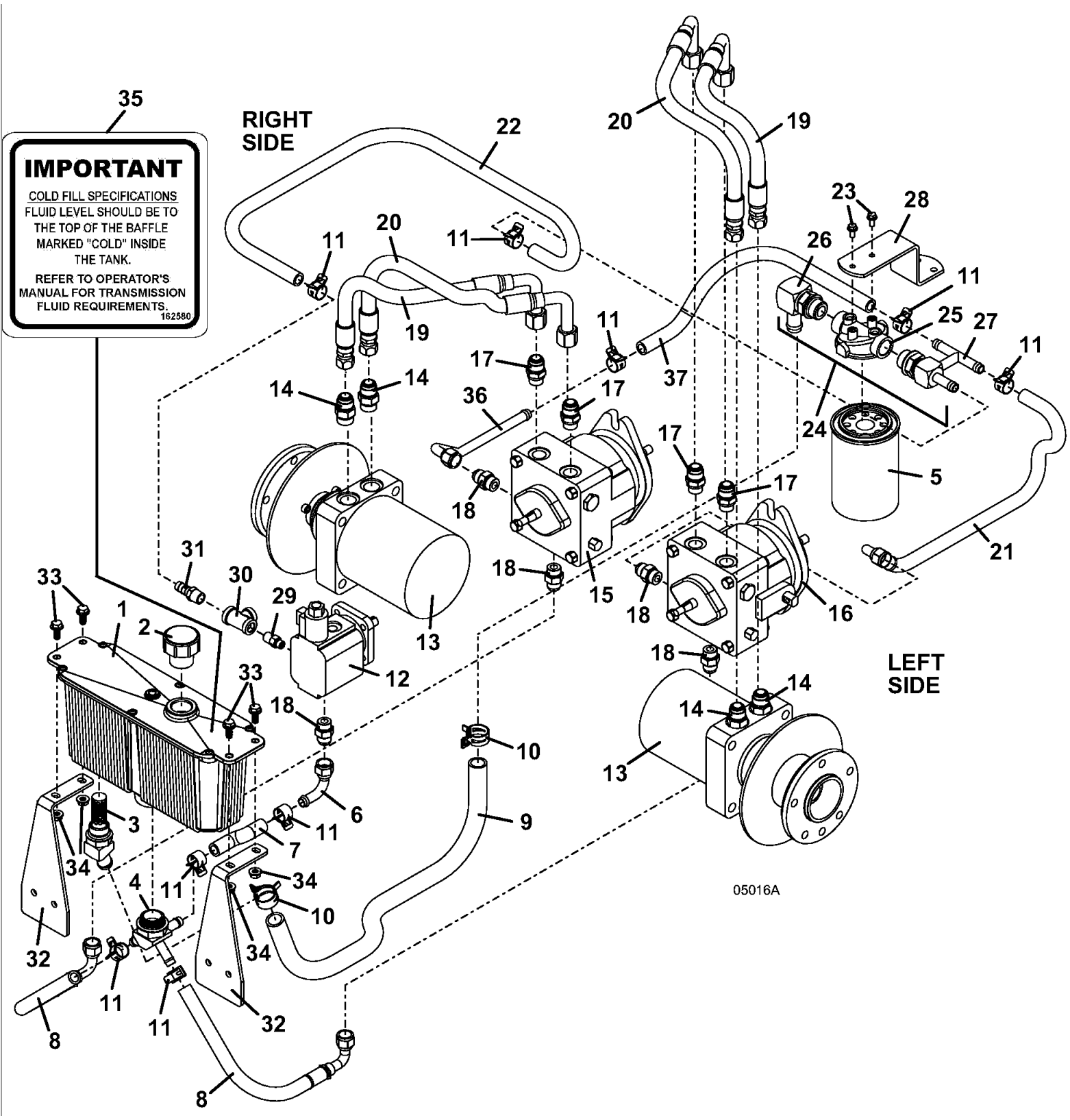
IMPORTANT
COLD FILL SPECIFICATIONS
FLUID LEVEL SHOULD BE TO THE TOP OF THE BAFFLE MARKED "COLD" INSIDE THE TANK.
REFER TO OPERATOR'S MANUAL FOR TRANSMISSION FLUID REQUIREMENTS.
162580
RIGHT SIDE
LEFT SIDE
05016A
1
2
3
4
5
6
7
8
9
10
11
12
13
14
15
16
17
18
19
20
21
22
23
24
25
26
27
28
29
30
31
32
33
34
35
36
37